QS 100W High Mast Floodlight 5000K 90D

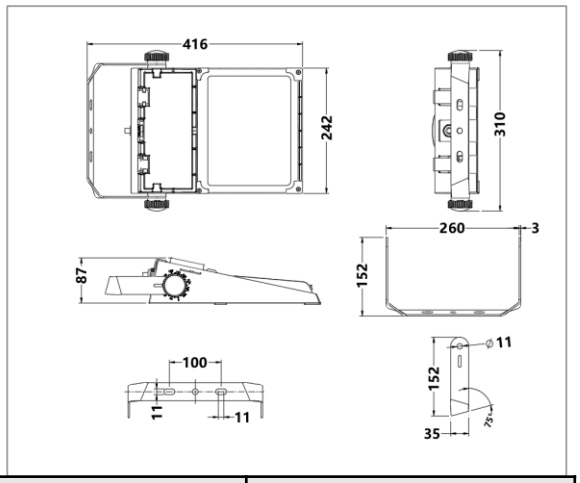

MODEL (JH SKU CODE ONLY)	CS-QS-PR-01-100-5000K-90D	**COLOUR TEMPERATURE (K)**	5000K
INPUT VOLTAGE (V)	100-240	**CRI (Ra)**	80
WATTAGE (W)	100W	**SDCM**	7
POWER FACTOR (PF)	0.9	**OUTPUT LUMEN (LM)**	13,000lm
DIMMABLE (Y/N)	Yes	**EFFICACY (LM/W)**	130 lm/W
DIMMING TYPE	1-10V	**BEAM ANGLE (°)**	90°
OPERATING TEMPERATURE (°C)	-10°C - 50°C	**DIMENSION (mm)**	L416*W310*H87
MATERIAL	ADC12	**NET WEIGHT (kg)**	3.54 kg
HOUSING COLOUR	Matte black	**LIFE SPAN**	50,000hrs
Ingress Protection (IP)	IP65	**COMPLIANCE**	SAA & RCM
PROTECTION CLASS	IK08	**WARRANTY**	5 years